NORTH AMERICA
First Choice When Quality Matters

Product Data Sheet
RCV2G25D-F7 - 3400 RPM

Description

RC series pumps are designed for a wide variety of high pressure washing applications. They are constructed with die-cast bodies and feature a brass head. Internal components include special thick solid ceramic plungers for long life and durability. Precision cast cooling fins are anodized for maximum heat dissipation. Oversized needle bearings on the drive side, and ball on the non-drive side together with the precision supports assure positive alignment and centering in relation to the crankcase. Valve cages of special designed Ultra-Form provide positive seating and extended life. Ball bearings on both sides of solid shaft drive pumps. One-piece connecting rods are special alloy aluminum, oversized for strength and load disbursement.

Specifications

Max GPM	2.0	Max LMP	8.0
Max PSI	2500	Max Bar	170
Power EBHP	3.4	Bore Dia. mm	15
Stroke mm	4.4	Weight Lbs	11
Max Temp	140°	Oil Capacity	9.81oz
Inlet Thread	1/2"F	Discharge Thread	3/8"F

Dimensions

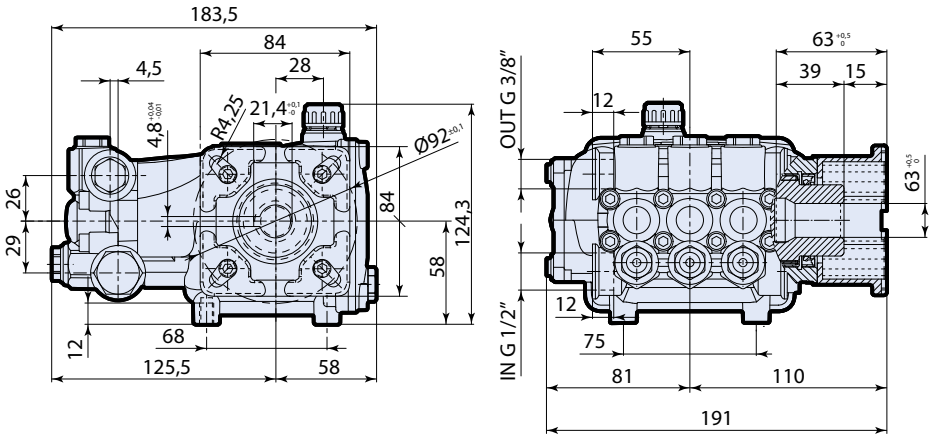

Measurements are - mm

Featuring

Manifold: High strength forged brass for long term use.

Bolts: Eight 6mm.

Plungers: NEW Ceramic Plungers, thicker wall to help prevent thermal shock.

Valves: Stainless Steel, valve seat o-ring is side mounted.

Seals: High quality high pressure seals. NEW low-pressure seal with a built in scraper.

Piston Guides: Two piece piston guides.

Drive End: NEW connecting rod with 12% more load surface. Large side cover sight glass, oversized bearing. Rear cover oil drain.

Crankshaft: Forged, precision ground.